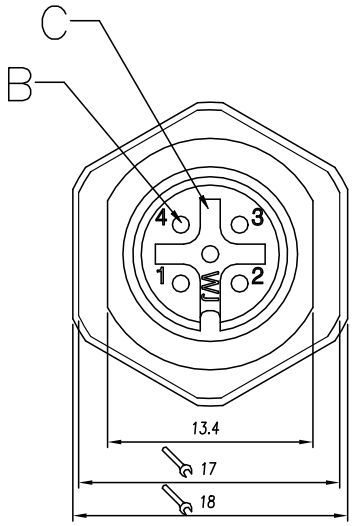

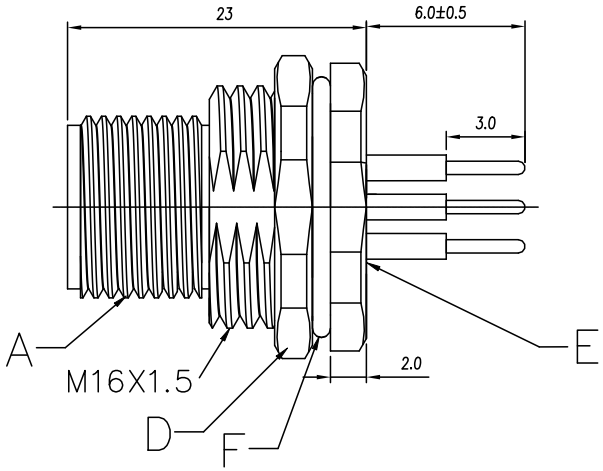

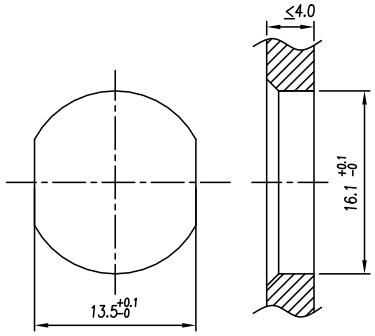

Panel cut-out

REVISION RECORD				
REV.	DESCRIPTION	ECN No.	APPROVED	DATE

IEC 技术参数 IEC Technical Data	IEC61076-2-101
工作温度 Operating temperatur [°C]	-25~+80
防护等级 IP Class (IN Locked condition)	IP67
额定电压 Rated Voltage [V]	—
额定电流 Rated Current [A]	—
导线截面积Conductor cross section 硬质/柔性导线 Solid/ flexible [mm²]	—
接线范围 Wire Range 单/多芯线 Solid/Stranded [AWG]	—
材 料 Material	
绝缘材料 Insulation Material	PA 66
阻燃等级 Imflammability	UL94V-0
导体材料 Contactor Material	铜合金 Copper alloy
导体镀层 Contactive Coating	镀金 Gold Plated
螺母/螺丝Connector Nut/Screw	Brass With Nickel Plated铜镀镍
符合RoHS环保要求	

Contacts Pin数	3Pin	4Pin	5Pin	8Pin	12Pin	17Pin
A-Coding	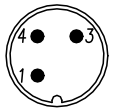	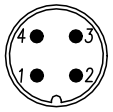	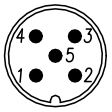		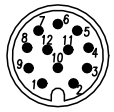	
Rated Current 额定电流	4A	4A	4A	2A	1.5A	1.5A
Rated Voltage 额定电压	250V	250V	60V	30V	30V	30V
Pin Size导体直径	1.0mm	1.0mm	1.0mm	0.8mm	0.6mm	0.6mm
PART NO.品名:	M12-A03P-ST0-M01-BQ1	M12-A04P-ST0-M01-BQ1	M12-A05P-ST0-M01-BQ1	M12-A08P-ST0-M01-BQ1	M12-A12P-ST0-M01-BQ1	M12-A17P-ST0-M01-BQ1

PCB Layout:

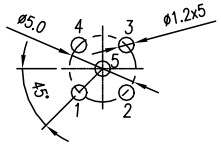

Pin OD: ø1.0(3P/4P/5P)

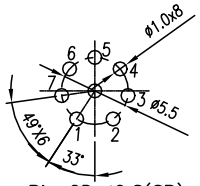

Pin OD: ø0.8(8P)

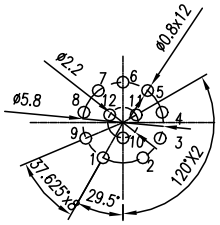

Pin OD: ø0.6(12P)

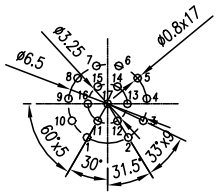

Pin OD: ø0.6(17P)

F		O-Ring	O-Ring FKM Black	pcs	1
E		Resin	Black epoxy resin for sealing	g	2
D		Nut	Nut: M16 X1.5,Brass With Nickel Plated	pcs	1
C		Housing	A-Coding Male,Black PA66	pcs	1
B		Terminal	Male Terminal ,Brass With Gold Plated	pcs	x
A		Screw	Screw M12 X1.0,Brass With Nickel Plated	pcs	1
编号 No.	料号 Materials.No	品名 Name	材 料 规 格 Description	单位 Unit	用量 Qty

慈溪市万捷电子有限公司
CIXI WANJIE ELECTRONIC CO., LTD

PART NO.:
M12-AXXP-ST0-M01-BQ1

NO SPECIFIED TOLERANCE			Cus' P/N:			Order No :	---		Drawing No.:	SP-02-M000XX
LINEAR	0.5~6	±0.1	DES.	Jun	DATE		UNITS	mm	THIRD ANGLE PROJECTION	PAGE
	6~30	±0.2	CHK.		DATE		SIZE	A4		1 of 1
	>30	±2%								
ANGLES	±1°		APP.		DATE		SCALE	X:X	文件等级:外部公开	